SM *Active* Series
Condensing Units

COOLSCAPE®

Scroll Compressor

Medium Temperature **1.5-4** HP

R-404A | R-134a | R-507

380V/3Ph/50Hz

Product Specifications

Model	Compressor			Fan Motor		Receiver Tank (Litre)	Connection Size (Inch)			Approx. Weight (kg)
	HP	Oil (Litre)	RLA/LRA (A.)	Blade x Qty (mm.)	FLA x Qty (A.)		Discharge	Suction	Liquid	
SMT 30 Active	1.5	0.5	3.0/40	450 x 1	0.6 x 1	3.4	1/2	3/4	3/8	85
SMT 33 Active	2	0.5	3.0/40	450 x 1	0.6 x 1	3.4	1/2	3/4	3/8	85
SMT 42 Active	2.5	0.5	4.8/48	500 x 1	1.0 x 1	6.0	1/2	3/4	1/2	92
SMT 52 Active	3.5	0.5	4.6/51	500 x 1	1.0 x 1	6.0	1/2	3/4	1/2	92
SMT 66 Active	4	0.5	7.13/62	500 x 2	1.0 x 2	6.0	1/2	3/4	1/2	153

Remark: **HP** : Horse Power **LRA** : Lock Rotor Amp. **RLA** : Rate Load Amp. **FLA** : Full Load Amp.

Performance Table

R-22 Medium Temperature Application

Model	Te -15°C		Te -10°C		Te -5°C		Te 0°C		Te 5°C		Te 10°C	
	P.F.	P.A.	P.F.	P.A.	P.F.	P.A.	P.F.	P.A.	P.F.	P.A.	P.F.	P.A.
SMT 30 Active	2.34	1.43	2.95	1.48	3.62	1.53	4.36	1.56	5.18	1.59	6.08	1.59
SMT 33 Active	2.70	1.61	3.39	1.68	4.17	1.74	5.01	1.79	5.95	1.81	6.97	1.82
SMT 42 Active	3.80	1.95	4.58	2.03	5.48	2.10	6.52	2.16	7.71	2.19	9.07	2.19
SMT 52 Active	4.78	2.41	5.78	2.52	6.92	2.62	8.18	2.70	9.57	2.75	11.06	2.78
SMT 66 Active	6.02	3.14	7.31	3.28	8.76	3.41	10.44	3.52	12.29	3.59	14.36	3.61

Remark: **Te** : Evaporating Temperature
3K Subcooling, 18K Suction Superheat

P.F. : Cooling Capacity (kW)
Ambient Temp. 38°C

P.A. : Power Input (kW)
: Out of Operating Range

Dimension

Figure 1

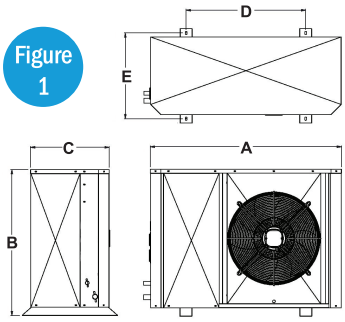

Figure 2

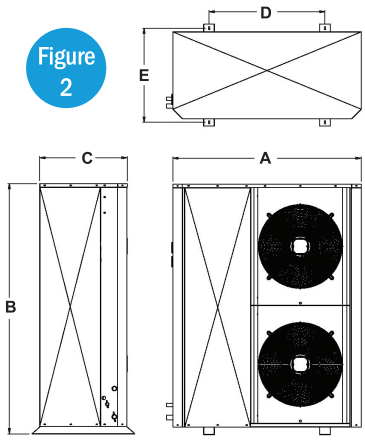

Figure	Model	Dimensions (mm.)				
		A	B	C	D	E
1	SMT 30 Active SMT 33 Active SMT 42 Active SMT 52 Active	1105	694	335	690	370
2	SMT 66 Active	1105	1294	335	690	370

บริษัท อ่างทองสากล จำกัด
SINCE 1959
ANGTHONG UNIVERSAL CO.,LTD.

519 ถนนรามคำแหง แขวงหัวหมาก เขตบางกะปิ กรุงเทพฯ 10240
โทรศัพท์ 02-318-3555 โทรสาร 02-318-1737
www.coolscape.info www.au.co.th